Print Status: ECN Review

NAIL FIN METHOD

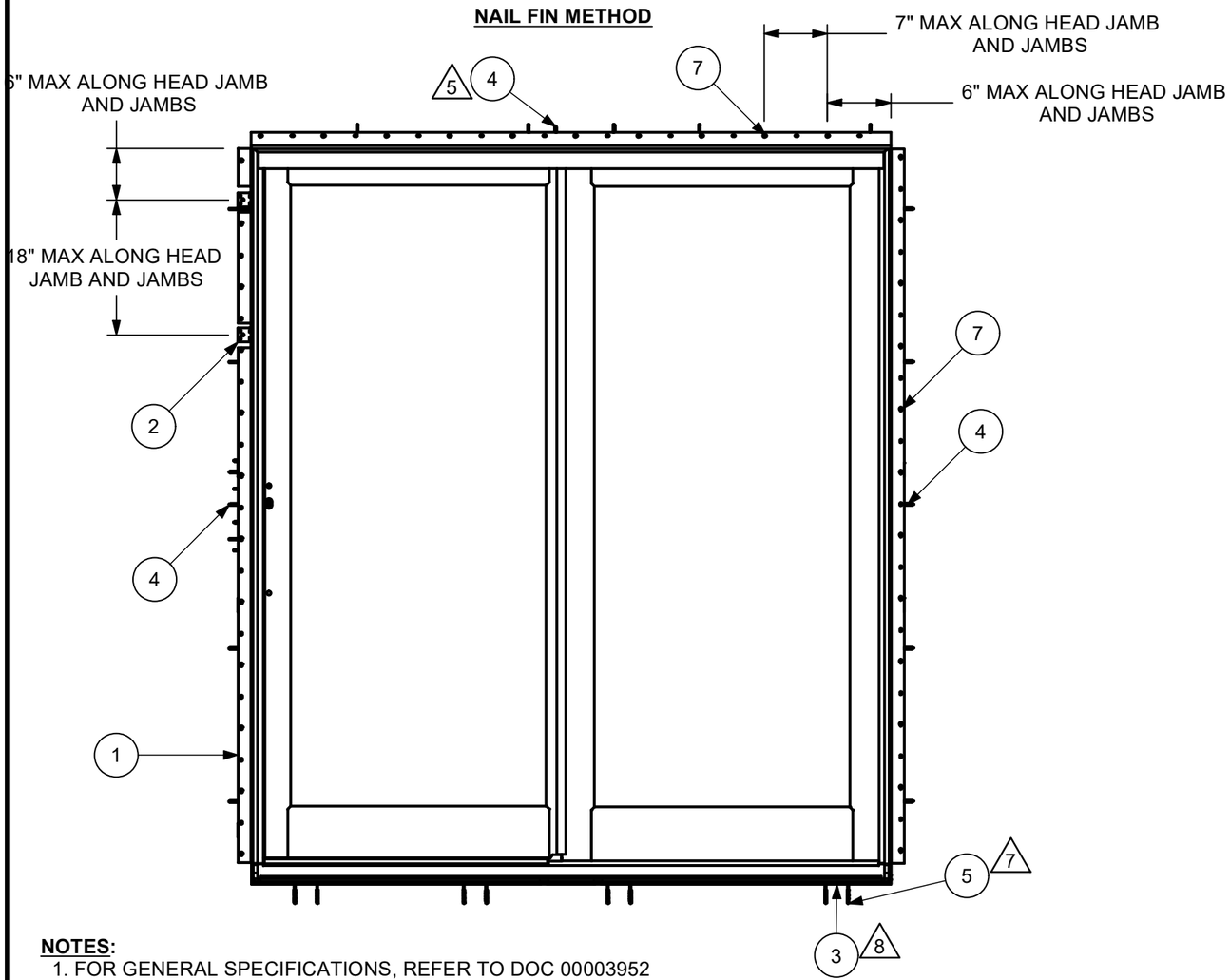

STRUCTURAL BRACKET METHOD

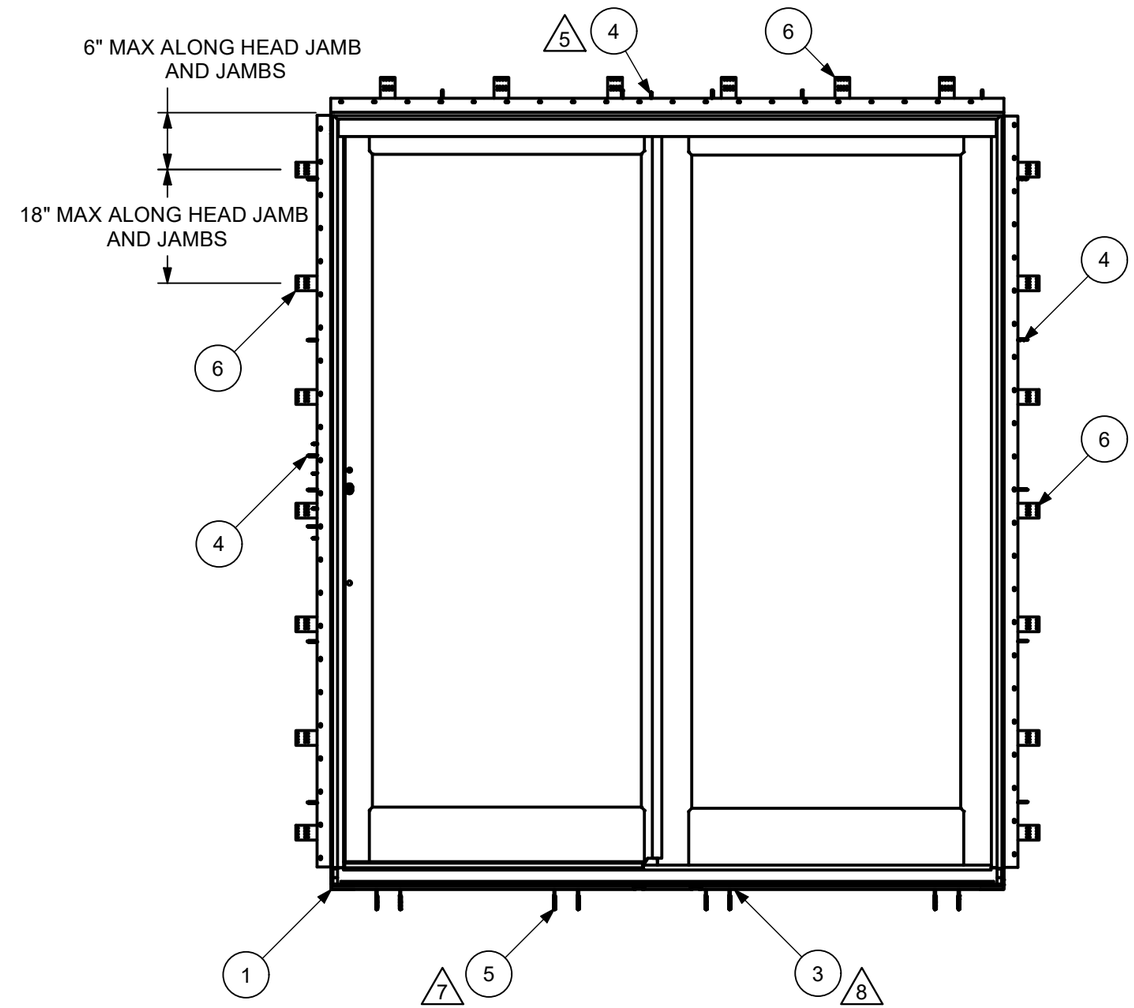

NOTES:

1. FOR GENERAL SPECIFICATIONS, REFER TO DOC 00003952
2. FOR INSTALLATION METHODS, REFER TO DOC 00098756
3. FOR MAX SIZE AND PERFORMANCE, REFER TO DOC 00090702
4. JAMB AND HEAD JAMB FASTENER HOLES ARE PRE-DRILLED
5. △ FOR HEAD JAMB INSTALLATION SCREWS, INSTALL ONE INSTALLATION SCREW THROUGH STATIONARY PANEL BRACKET AND THROUGH THE PANEL GUIDE NEAR THE MEETING STILES AND ALTERNATING PANEL GUIDE HOLES STARTING FROM MEETING STILE INSTALL SCREWS
6. FOUR INSTALLATION SCREWS TO BE PLACED THROUGH KEEPER ON OPERATOR JAMB
7. △ SILL SCREWS ARE PLACED THROUGH THE SILL BRACKETS IN THE TWO OUTER HOLES
8. △ SILL BRACKETS TO BE PLACED 6 INCHES FROM CENTER AND 6 INCHES FROM EITHER SIDE
9. MINIMUM NAIL EMBEDMENT DEPTH: 1-15/16"
10. MINIMUM SCREW EMBEDMENT DEPTH: 1-3/16"
11. MINIMUM EDGE DISTANCE: 1/2"
12. GLASS COMPLIES WITH ASTM E1300

CONFIGURATION	MAX FRAME SIZE	DP RATING
8080 OX/XO	95 X 95-1/2	+55/-55

UNIT TYPE: ELSFD IZ3

CATEGORY: SLIDING FRENCH DOOR

ITEM	DWG NO	DESCRIPTION
7	NA	2" ROOFING NAIL
6	00003778	STRUCTURAL BRACKET
5	00064718	#10 X 2-3/4", FH, 2/3, MAS
4	00003264	#8-18 X 3" TYPE AB, FULL THREAD
3	00083201	BRACKET, SILL, INSTALLATION, HP/IZ3
2	00052256	INSTALLATION CLIP
1	00095975	UNIT, PANEL INSTALLATION, OX/XO, OPER.

PARTS LIST

REV	DESCRIPTION / REQUESTOR	ECN NO	DATE	REV BY
9.0	ADDED NOTE 12; UPDATED NAIL SPACING (WAS 4"); UPDATED BRACKET SPACING (WAS 12"); ADDED SIZE CHART	27740	8/23/2023	JH

MARVIN® RESEARCH & DEVELOPMENT

COLLECTION: ELEVATE

DWG TYPE: INSTALLATION
DESCRIPTION: INSTALLATION ELEVATIONS, IZ3 OX/XO

CHK: JDD 09/01/23	SIZE: B	CLASS: ASSY	DWG NO: 00098757	
APP: CRR 09/08/23	SCALE: 1:16	DATE: 12/15/2015	DWG BY: NARVESEN, ANDREW	SHEET: 1 OF 2

Template Version 14

NOTICE - CONFIDENTIAL INFORMATION
The information in this document is privileged and strictly confidential. The information contained herein shall be used only by Marvin employees and by those agents or suppliers granted official written permission. If the reader of this document is not the intended recipient, or the employee or agent of the intended recipient, please delete this document from all data storage devices, and destroy all hard copies. Any unauthorized dissemination, distribution, copying or other use of the information contained in this document is strictly prohibited.